DES 211

CREATIVITY AND CONCEPT IN DESIGN

FINAL PROJECT REPORT

PORTABLE SHOWER MATERIAL HOLDER

SUBMITTED BY:

KIRTIK SINGH: 1810110109

PRAKHAR RATHI: 1810110169

SAATVIK JELLA: 1810110196

MENTOR:

Dr Rajeev Kumar Singh

_____

(Signature)

ACKNOWLEDGEMENTS

We'd like to take this opportunity to extend our heartfelt gratitude to the university and **Professor Amit Ray** for this wonderful opportunity in the form of this course. We truly enjoyed every bit of this course and the opportunities that we received through this course. This project would never have become a reality if it wasn't for our project guide, **Dr Rajeev Kumar Singh**, who provided us with ceaseless support and guidance throughout the course of this semester. This project would not have been possible without their able guidance and expertise.

1. Objective (Problem identification)

Our product does not solve a huge problem like climate change or world hunger and we tried to focus on a very small problem which everyone might have faced at a particular point of time and something that needs to be dealt with on a daily basis. Everytime a person goes to take a shower, there is always a high chance that there isn't a rack to keep the bar of soap or shampoo or conditioner which leads to the problem of either keeping it on the dirty floor or sticking it somewhere in the faucets. This is a problem faced by students living in hostels, people in the gym or pool showers and many others.

This leads to other problems. If the soap is on the floor or in a case on the floor, it gets really difficult to pick it up and keep it back in place, especially if there is soap in the eyes. The solution is that there be a rack on the eye level so that we can easily reach out to it and then place it back without having to face the problem of hitting our head in the facet.

We also stumbled upon this problem, quite literally, while in the shower one day. One of the members tripped in the bathroom while trying to pick up the soap case and at that time, we were enrolled in DES211 class. We were discussing in class that the best solutions do not have to be amazing or so innovative that it blows someone away. We discussed how a small stick on top of a feviquick earned someone the best prize in IIT Kanpur. We took inspiration from that and realised that Soap cases are not something new neither are soap cases hanging on a wall using nails. At the same time, everyone knows what a vacuum cup is but what if we combined all of that and made a product that solves just one small problem. That is how we designed the **portable shower material holder**.

We also wanted to solve one other problem and that is that all the available products in the market which are even remotely similar are made out of plastic. At the time when climate change is at its peak and plastic is becoming a huge menace, we felt that it was important that we eliminate plastic as much as we can.

2. Research on the topic:

a. Competition:

To understand whether our product is unique and desirable, we had to check the available and already existing products in the market. There were none, since all those products were either non portable, or permanently fixed like bathroom stands.

b. Observations:

What we observed after coming in college was that a lot of people face difficulty placing their shampoo bottles or soaps in the extremely small / absent cutouts given in the washrooms. These cutouts are so small that nothing but a small dry soap could be kept in them and it doesn't even have enough space for a small soap holder, which is unhygienic.

Thus, we either had to keep it on the floor or used to keep it on the top of the partition where it would either get dirty or fall off completely, causing irritation, and even worse, injuries. These day to day observations are what motivated us to make something like what we did and we are nothing, but extremely proud that this problem could be solved.

3. Concept Generation with Sketch/Drawing and Engineering Graphics Drawing

Design 1

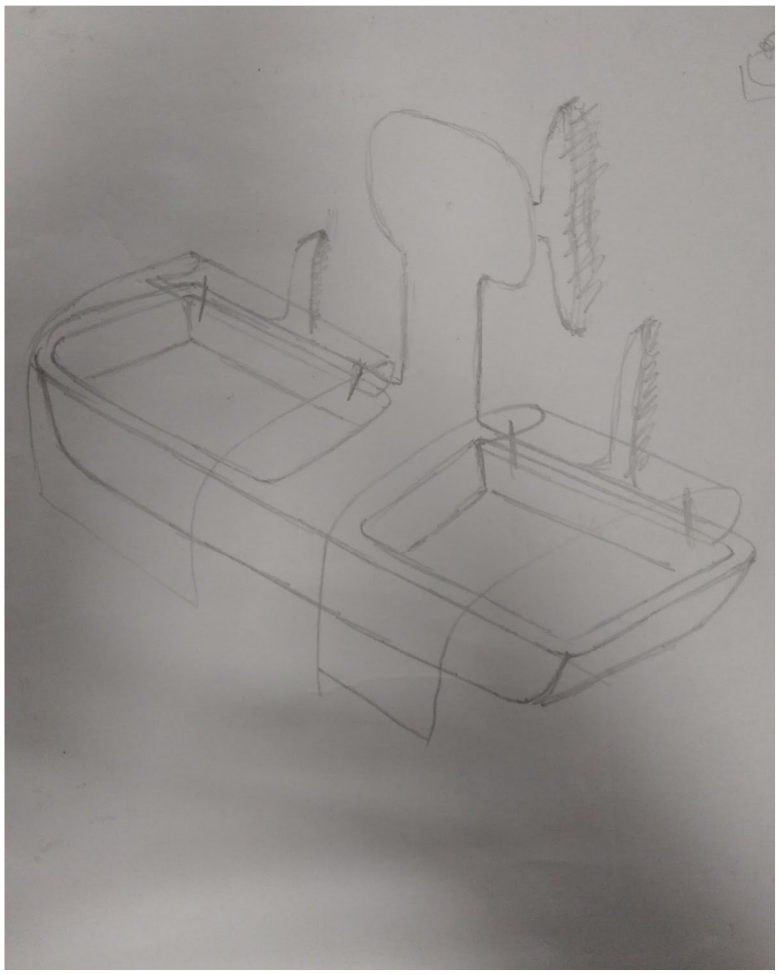

The above picture was the first design we'd drawn keeping in mind the product we were supposed to fabricate. This has two cavities, one for holding a soap, and the other one for miscellaneous bathroom equipment (shampoo, handwash, etc.). There's a provision for 3 vacuum cups for this design. But, we hadn't gone forward with this, since we felt it would be on the heavier side. And, there was zero possibility of adding fixtures like the mobile phone holder.

Design 2

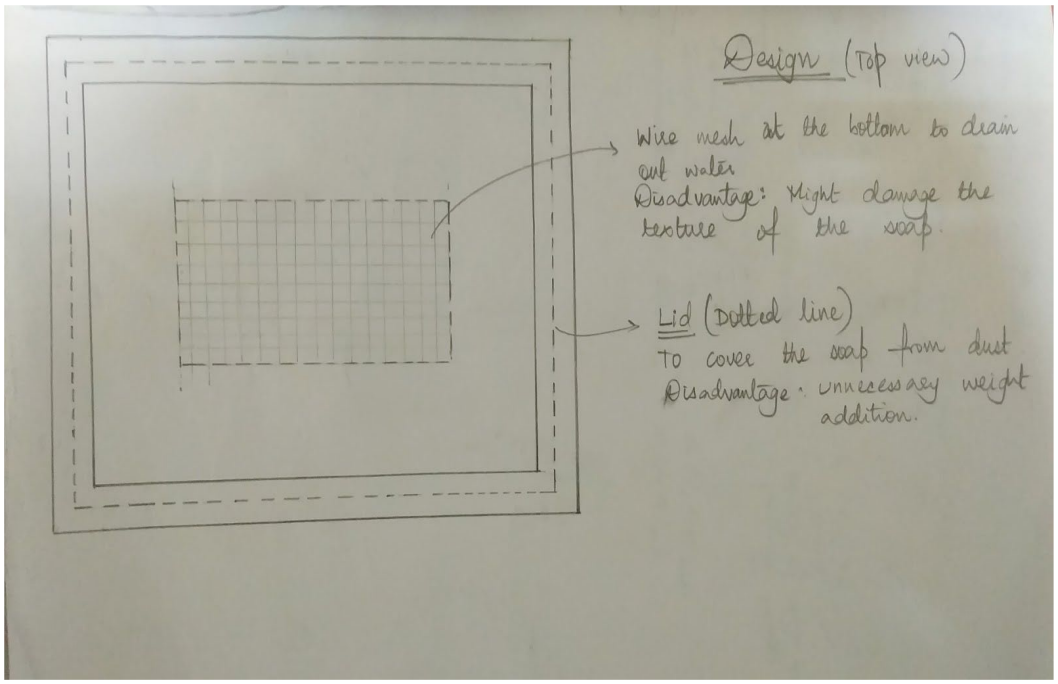

The disadvantages of this design are mentioned in the picture. Regarding the lid, since our prime objective was to fabricate the product with minimal usage of plastic, we felt adding a wooden lid would mean extra weight and practically unnecessary. The lid would actually make the usage of the product in the shower uncomfortable.

Final Design

Below is the final design which we've fixed, considering all it has to offer. This allowed for the fixture of a prospect mobile phone holder. We also felt that this was a lot more compact and has a better weight distribution than our other designs.
Attached below are also, few pictures of the final design made on SOLIDWORKS. The 3rd picture is the view of the base of the product.

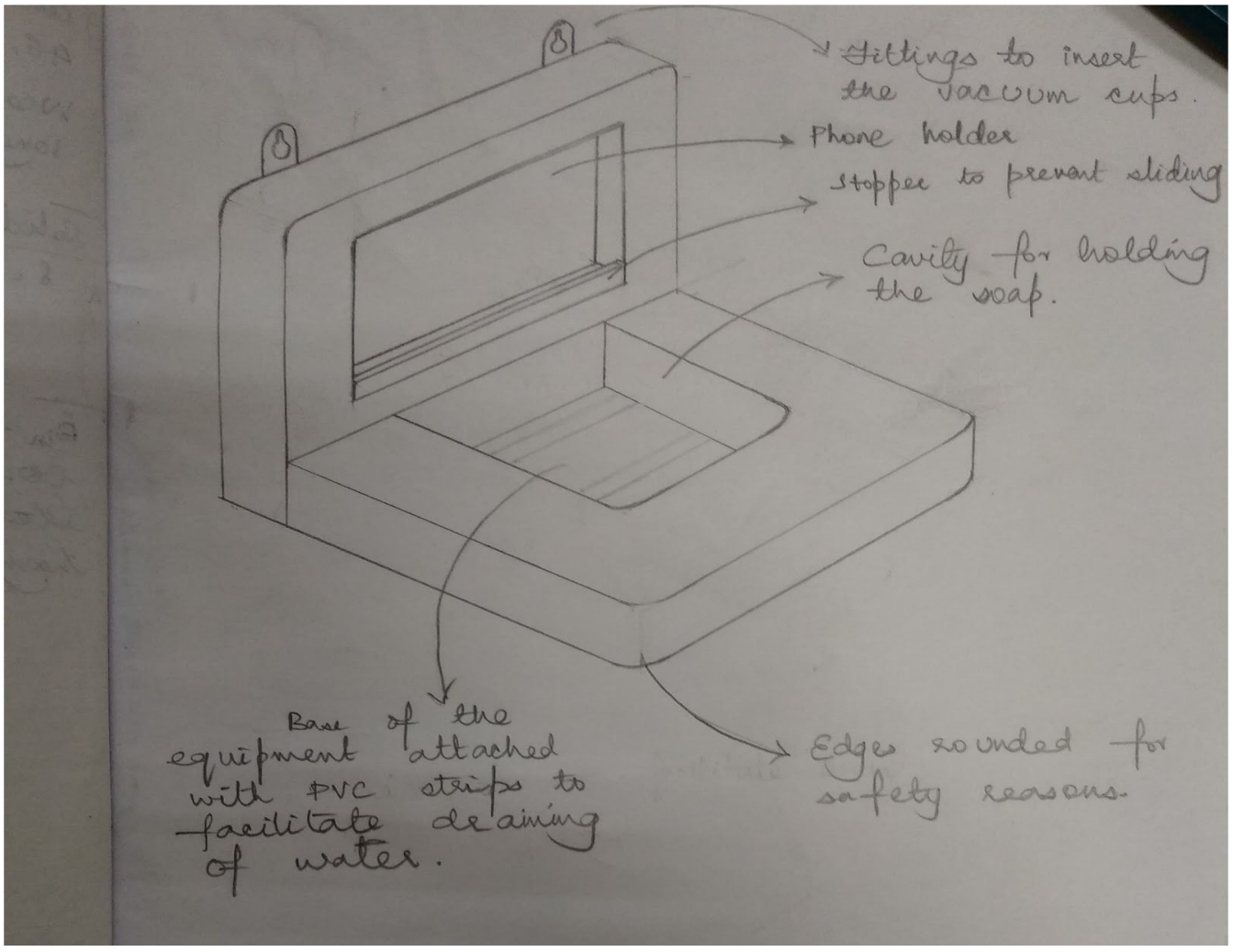
Fittings to insert the vacuum cups.
Phone holder
Stopper to prevent sliding
Cavity for holding the soap.
Base of the equipment attached with PVC strips to facilitate draining of water.
Edges rounded for safety reasons.

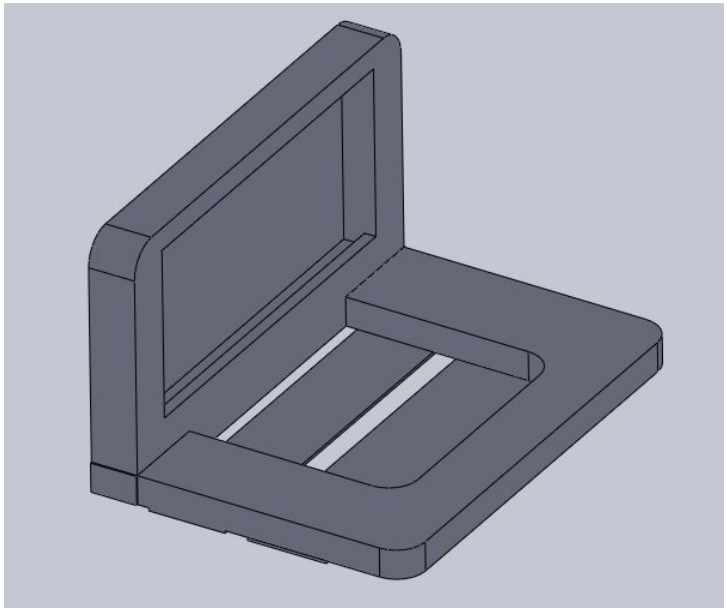

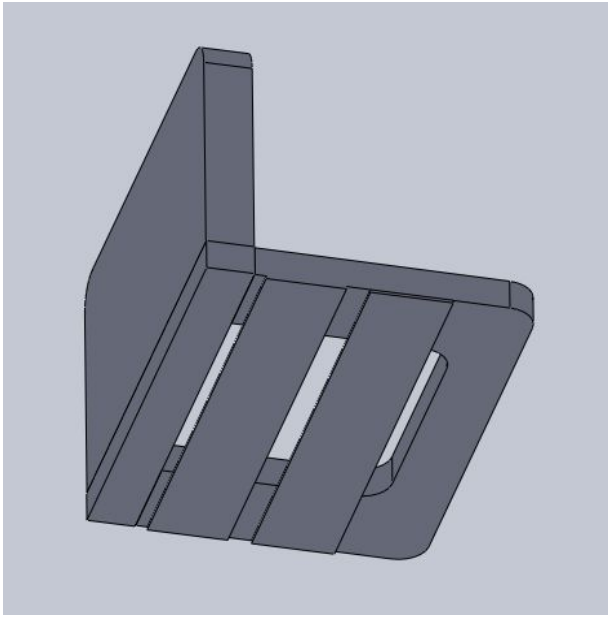

4. Fabrication process:

- **Materials Used:** The following materials were used:
  - Plywood
  - Nails
  - Fevicol
  - Suction cups
  - Metal hangers
  - PVC strips
- **Tools Used:** The following tools were used:
  - Wood saw
  - Hack saw
  - Drill machine
  - Jig saw
  - Sander
  - Chisel
  - Rasp
  - File
  - Sandpaper
  - Table vice
  - Screwdriver
  - Hammer
  - Safety goggles
  - Steel scale
  - Pencils
- **Process:**

  We took about 2-3 square feet of plywood and started making the two basic structures by cutting the plywood into rectangles of the dimensions decided. We cut the wood with the rasp file, hack saw and wood saw, filed it with the chisel with the help of the table vice. We used a Jig saw machine to cut out the cavity for the soap. We had filled all gaps with feviquick and saw dust when we tested a similar prototype from wood but ended up realising that the wood cracked when we tried to drill holes in it. That's when we started with plyboard again.

Once we were done with cutting the wood into the right size and making a cavity in the lower half, we used fevicol and nails to fix the two parts perpendicular to each other and let the fevicol dry overnight between clamps.

We then used a drill machine to drill holes and also used more nails to fix the metal hooks on top. Lastly, we added the PVC strips to the bottom and the suction cups and tested the structure for strength and durability. The sides were also smoothed and rounded to avoid accidental injuries using files and sandpaper.

5. Costing Analysis:

As mentioned earlier, the aim was to keep the product cost as minimal as we could, while providing useability, and portability.

Component	Units	Procurement	Cost
Plywood	2	Found in one of our member's house as leftovers	₹50 / Sq.Feet = ₹100
Hanging Metal Hooks	2	Market in Dadri	₹5 per unit = ₹10
Suction Cups	2	Market in Dadri	₹10 per unit = ₹20

Apart from this all the materials and tools were available in the lab. Thus the total cost for the product would not under any circumstances be more than ₹150 taking everything into consideration.

6. Our Experience and Thought Process:

If we were to say that we were excited about this course right from the beginning, then we would be lying. Two of us were CSE students and for the first few weeks, we were under the assumption that this course helps

us in no way possible and that this course is for mechanical or electrical students. That said, we regret not paying attention in class in those initial days.

However, this course turned out to be very different from any other course that we have been enrolled in. In other courses, we come to class, take down notes and try to understand what is being taught and move onto the next class. Right before an exam, we revise what has been done in classes and write the exams. In design lectures, however, we never had to open our notebooks because we only listened. We learned from experiences of other people because we weren't being taught how to design, we were being taught how to think different and that has made all the difference. We learned about how nature can offer us all the design ideas we needed and how other people's problems can be understood and solved using simple design tools.

Apart from the lectures, most of the learning for us took place outside our classes. During the hours that we spent in the design lab, we were always amazed by the things we were learning and the tools that we could use. We never realized that there were so many different ways of just shaping wood, each one having its own pros and cons. Our multiple failed attempts at shaping the perfect wood piece helped us in learning so many new things about the quality of wood, it's texture and the means of cutting a perfect hole into the wood piece. Not only did we realise how we could make different things with wood but we also found out about the sort of wood that needs to be used for different areas.

Even when we were not working, we were brainstorming ideas and how to make the project more user friendly and accessible while adding new features and improving the existing one.

We also had to do a lot of experimenting with the sort of weight that we could put on the design simply because it had to be sound enough to hold all the weight of a wet soap and a phone. Apart from that, we had to make it strong enough to be held up by just two vacuum cups and that took us hours of experimenting and failing to finally design the perfect combination.

"*Behind a successful design, there are multiple failed attempts and hours spent in B019."*

-Kirtik Singh, CSE' 22

It is also important to mention here the guidance and support we received from our project guide, Dr. Rajeev Singh. He gave us the task of building something that had a market value and something that he would buy for himself from us. Now, at first, it seemed easy. All we had to do was build something productive enough for the market. The more we thought about it, the more we realized that this isn't as simple as we assumed. To sell something in the market, we have to first have to understand what the consumers want and whether they will buy it. This led us to our market research results on the consumer end.

"*Design and build something that you can sell me."*

-Dr. Rajeev Singh

After submitting multiple ideas and not getting any of them approved, we finally stumbled upon one of them the day one of our members told us that he fell in the shower because he was trying to pick up the soap from the ground and we realized that this was the problem we will tackle.

" *Guys, I fell in the shower today, I will tell you why…"*

-Saatvik Jella

As soon as we told our project guide, he resounded with the idea because he had once faced the same issue and that was a green light for us to work on this model further.

"*I faced the same issue when I tried to use the shower in my gym"*

-Dr. Rajeev Singh

7. Conclusion and scope for further improvement:

Since this was our first ever hands-on project and not having any prior exposure to working in a design lab, there were obviously some roadblocks we faced. Although we are very proud and happy of what we have made, we realise that it is still a prototype and there can be further improvements and optimisation to the same, to make it a better product which is more unique and can truly be called an innovation. We also believe that a market exists for this product and it can actually serve the needs of a large fraction of the consumer base and help many others out there.

Some of the observations and hurdles we encountered were:

- If the structure could be made of lighter material such as a lighter wood, it would be less bulky and heavy. However, that was beyond our scope and reach.
- It could be made a little smaller so that it'd fit in a regular bag. However, that limits the space for all the components that needed to be added. Hence, a perfect balance between size and portability needs to be struck for the best results.
- We could add hinges to make it even more compatible and portable by creating spaces for the soap and phone holders on the closing end as well. Although, adding that increased the metal weight so we need to find a better way to hold it.
- We need to cut out a space on the top for a phone holder so that a person can keep their phones in it and it can also reduce the weight of the product making it easier for music lovers.
- We have also added a bent metal rod which can be used as a hanger as well, if needed.
- We need to paint and waterproof it to make the product more beautiful, aesthetic and succinct.

Overall, we thoroughly enjoyed the experience and feel a deep sense of satisfaction and pride in submitting our project and report.

Thank you.